SEPARABLE TEE CONNECTOR FMCEAUs-630/C

for polymeric cables - Deadbreak - Serie 400 rating 630A (with screw contact)

formfit

APPLICATION

Utilisation

- for connection of polymeric MV cables to transformers, switchgear units, motors, etc.
- separable combinations that give flexibility to network configurations.
- indoor and outdoor installation. The connector is entirely **protected by an insulating watertight envelope.**
- continuous 630 A rms
  overload 900 A rms (8 hours per 24-hour period).
- operated when de-energized.

Cables

- single core polymeric insulation (PE, XLPE, EPR).
- copper or aluminium conductors.
- semi-conducting screen either extruded or taped.
- metallic screen of tape, wire or polylam type.
- insulation voltage up to 24 kV (U_m).
- conductor sizes : 25 to 240 (or 300) sqmm.

LIMITED TO 24 KV

INTERFACE C

INTERFACE Z

STANDARDS

Generally meets the requirements of VDE 0278 - C33-051-C33-001 - HD 269-1 - IEC 60502-4.

Interfaces : CENELEC EN50180 - EN50181.

QUALITY ASSURANCE

The Company has been assessed by third party and found in conformity with the requirements of the standard ISO 9001 - EN 29001.

PACKING

Supplied as a kit of 3 single connectors containing all the necessary components.

Shipping weight and volume (approx) of kit :
6 kg / 0.026 m^3

INSTALLATION FEATURES

- no need for special tools, no heating, taping or filling.
- vertical, angled or inverted position.
- minimum distance required between phases.
- energizing may take place immediately after the connector is plugged into its bushing, dead-end plug…

OTHER PRODUCTS

- Associated products such as bushing FMBOs-400 and accessories.

SEPARABLE TEE CONNECTOR FMCEAUs-630/C

for polymeric cables - Deadbreak - Serie 400 rating 630A (with screw contact)

formfit

DESCRIPTION

① **Clamping screw**
Steel silver-plated component threaded at both ends for attachment of the mating items: bushing, insulating plug, accessories. A uniform contact pressure is maintained for any combination.

② **Conductor lug**
Crimped, deep indented or bolted type. Connection of clamping screw through the flat hole.

③ **Semi-conducting inner screen**
Insert of moulded semi-conducting EPDM enclosing the conductor lug so that ionisation of the air remaining trapped inside is prevented.

④ **Insulating body**
Moulded from insulating EPDM, for integral reconstitution of insulation. It maintains a uniform contact pressure on the cable insulation and on the interface of mating items, providing an excellent moisture seal.

⑤ **Adapter**
Composite EPDM moulding. To adapt the connector body to the different cable sizes (cross sections).

⑥ **Insulating plug**
Epoxy component with threaded metallic insert for attachement to the clamping screw.

⑦ **Cap**
Moulded semi-conducting EPDM. Protects the insulating plug during normal use.

⑧ **Earth cover**
Moulded EPDM. Ensures watertight protection of the earthing device.

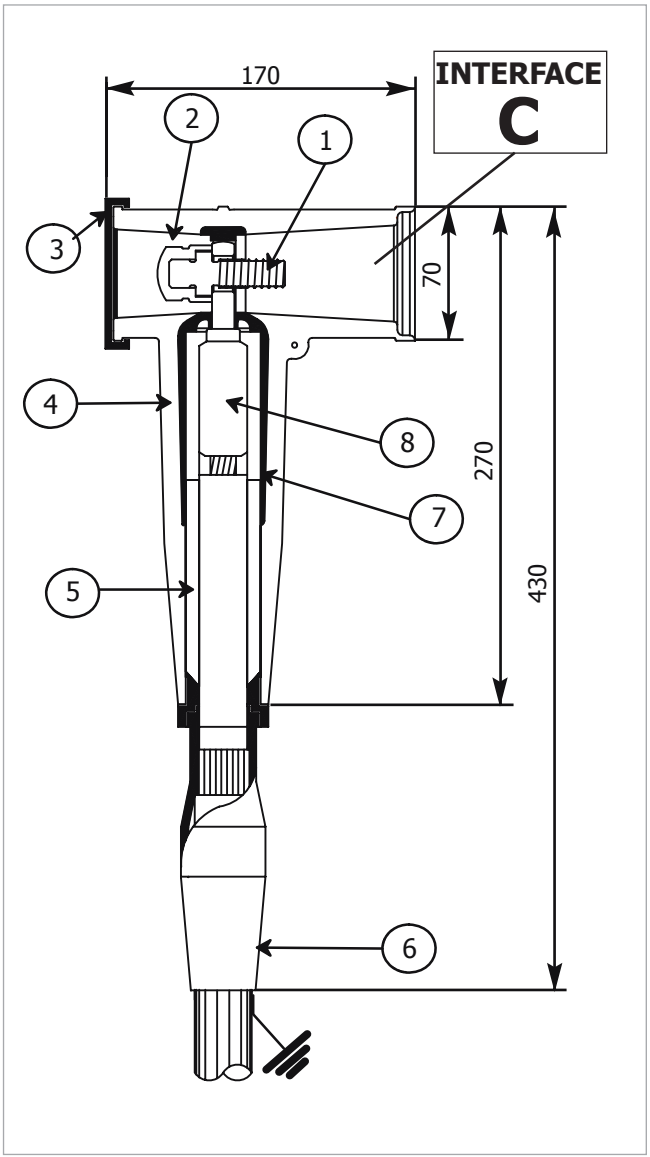

PRYSMIAN CABLES & SYSTEMS

SEPARABLE TEE CONNECTOR FMCEAUs-630/C

for polymeric cables - Deadbreak - Serie 400 rating 630A (with screw contact)

formfit®

OVERALL DIMENSIONS (Installed on bushing)

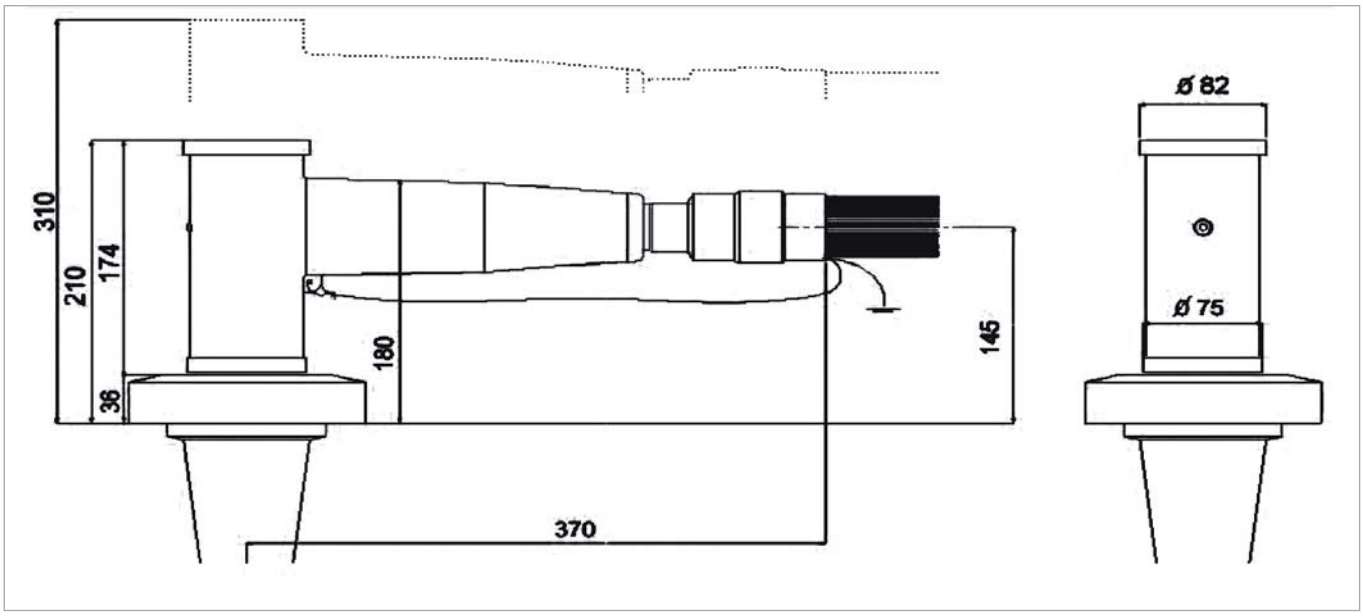

Dimensions in mm
* Minimum dimension required for disconnection.

SELECTION GUIDE

1. Select in the table below the kit model corresponding to the diameter over insulation of cable.
For cables with reduced insulation thickness, please contact us.

Diam. over insulation in mm		Kit Reference	Conductor size in mm² (for guidance only)					
			Highest voltage in Um					
Min.	Max.		12 kV		17,5 kV		24 kV	
18,5	20,5	FMCEAUs-630/400-Z	70	95	50	70	35	50
19,9	21,9	FMCEAUs-630/400-A	95	120	70	95	50	70
21,4	23,5	FMCEAUs-630/400-B	120	150	95	120	70	95
22,9	25,1	FMCEAUs-630/400-C	150	185	120	150	95	120
24,4	26,6	FMCEAUs-630/400-D	185	240	150	185	120	150
26,0	28,3	FMCEAUs-630/400-E	240	300*	185	240	150	185
27,8	30,4	FMCEAUs-630/400-F	300*		240	300*	185	
29,8	32,7	FMCEAUs-630/400-H			300*		240	240
31,8	35,3	FMCEAUs-630/400-J					300*	300*

(*) for 300 sqmm, please consult us.

For cables with non peelable outer semi-conducting layer : carefully check the diameter over insulation after removal of the outer semi-conducting layer.

2. Specify insulation voltage U_m in kV :
12 - 17.5 - 24

3. Select suitable earthing device in the table below :

Earthing Device Reference	Type of Metallic Screen of cable
T1	polylam
T2	copper tape
T3	copper wires

4. Select suitable lug :

4.1. - indicate **"C"** for copper conductor
- indicate **"A"** for aluminium conductor

4.2. - indicate conductor size in sqmm.

4.3. - add "DIN" or "SM" if suitable (see table below) :

Types of lugs	Aluminium	Copper	Add to Kit Ref.
Deep indenting according HN	available	N.A.	---
Hexag. crimping according DIN	available	available	for alu, add "DIN"
Mechanical lug (*)	available	available	add "SM"

(*) for available cross sections, please consult us.

EXAMPLE OF ORDER

20 kV polymeric cable, 1x95 sqmm, diameter over insulation 24,1 mm, with copper tape screen, aluminium conductor, lug for deep indenting : **FMCEAUs-630/C-C-24-T2-A95.**

IMPORTANT : before using this product, you must check if it is suitable for your intended application. You assume all risks and liability associated with such use. If any doubt, please consult us.

PRYSMIAN CABLES & SYSTEMS