BUSHING for in-oil application FMBOs-400

Deadbreak operation - Serie 400 rating 630 A (Screw contact)

formfit

APPLICATION

Utilisation

- in-oil insulated equipment (transformers, switchgear…).
- indoor or outdoor installation.
- insulation voltage up to 36 kV (U_m).
- continuous 400 A rms
  overload 600 A rms (8 hours per 24-hour period).
- operated when de-energized.
- interchangeable with 1000 A porcelain bushings.

INTERFACE
C

STANDARDS

Generally meets the requirements of C 33-001 - C 33-051 - C 66-555 - EN 50180 - EN 50181.

QUALITY ASSURANCE

The Company has been assessed by third party and found in conformity with the requirements of the standard ISO 9001 - EN 29001.

PACKING

Supplied as a kit of 3 pieces.

Shipping weight and volume (approx) of kit :
12 kg / 0.09 m^3

INSTALLATION FEATURES

- the bushings are fastened to the equipment by means of clamps.
- vertical or horizontal position.
- **may only be energized once separable connector or dead-end receptacle installed.**

OTHER PRODUCTS

- Associated products such as separ able tee connectors FMCTs-400, FMCEAs-630/400, FMCEAUs-630/C, FMCTXs-630/C, FMCTs-400/1250 and accessories.

BUSHING for in-oil application FMBOs-400

Deadbreak operation - Serie 400 rating 630 A (Screw contact)

formfit

DESCRIPTION

① **Body**
Moulded in epoxy resin with electrode insert, suitable for immersion in oil.

② **Interface C**
Part which accepts the mating interface of a connector or of an accessory. The elastic sealing pressure prevents the ingress of moisture.

③ **Earthing**
The electrode insert is connected to earth by a stainless steel plate.

④ **Bushing rod**
Copper rod, with lower part threaded to allow connection to MV windings.

⑤ **Bolted contact**
Threaded part which accepts the clamping screw of the mating item.

⑥ **Cap**
For mechanical protection of the interface during storage and transport. **The cap cannot be used for electrical protection.**

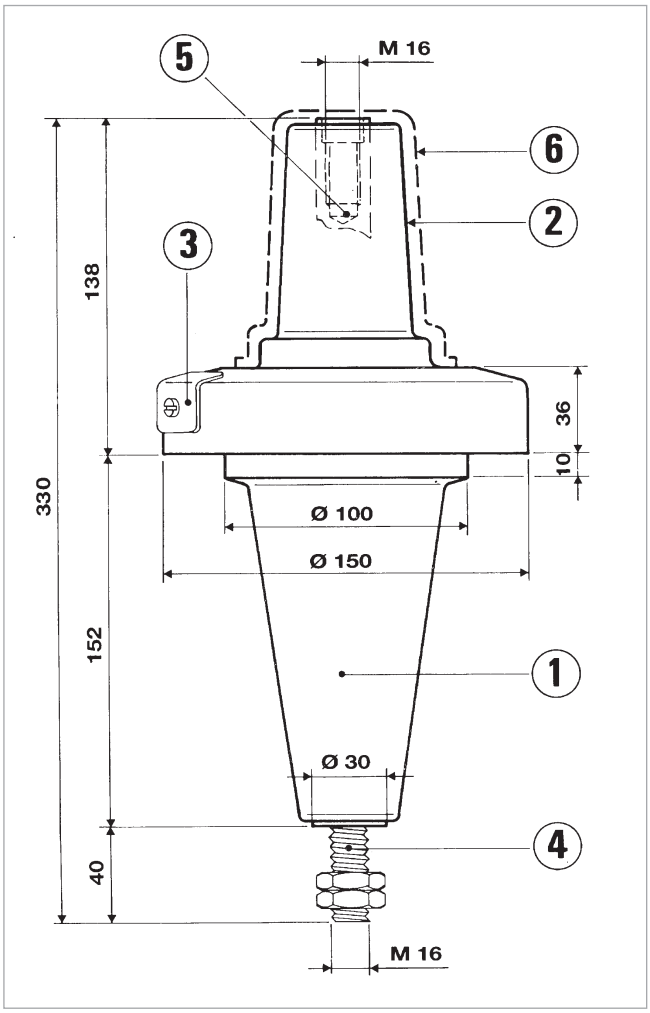

MINIMUM	IMMERSION
Voltage	H mm
12 kV	40
24 kV	50
36 kV	70

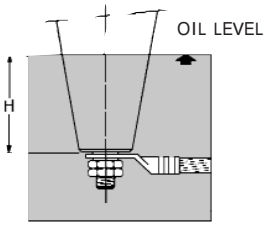

FASTENING SYSTEM
NF C 52053
(Clamp)

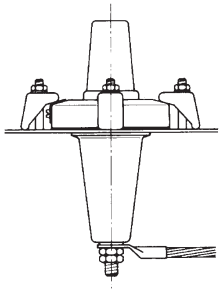

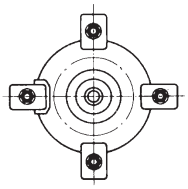

SELECTION GUIDE

Select model according to insulation voltage (U_m) in kV :
12 - 24 - 36

EXAMPLE OF ORDER

24 kV, serie 400 rating 630 Amp., in-oil application :
FMBOs-400-24.

IMPORTANT : before using this product, you must check if it is suitable for your intended application. You assume all risks and liability associated with such use. If any doubt, please consult us.

PRYSMIAN CABLES & SYSTEMS